DAC-0101 Version: 1

10Gbps SFP Direct Attach Kupferkabel, 1m, Twinaxial

The SFP+ passive cable assemblies are high performance, cost effective I/O solutions for 10G Ethernet and 10G Fiber Channel applications. SFP+ copper modules allow hardware manufactures to achieve high port density, configurability and utilization at a very low cast and reduced power budget. The high speed cable assemblies meet and exceed Gigabit Ethernet and Fiber Channel industry standard requirements for performance and reliability.

Key-features

- Unterstützt Multi-Datenraten bis zu 10,5 Gbit/s
- Abwärtskompatibel zu 1 Gbit/s
- Hot-Plug fähiger 20-Pin SFP
- I/O Anschluss für Hochgeschwindigkeitssignale optimiert
- Konform zu IPF (Improved Pluggable Form Factor) für erweiterte EMI/EMC Performance
- Kompatibel zu SFP+ MSA
- Temperaturbereich von 0 bis 70°C
- RoHS konform

Specifications

Systemeigenschaften

Stecker:
Passive Copper Cable AWG 30

Leistungsaufnahme:
Supply Voltage: 3.3V
Max Voltage/Current: 3.6V/300mA

Datenrate:
Support for multi-gigabit data rates up to 10.5Gbps

Funktionen

Allgemein:
Hot-swappable

Leistung

Betriebsabstand:
1 meter

Environment

Temperatur (°C):
Operating: 0°C ~ 70°C
Storage: -40 ~ 85°C

Luftfeuchtigkeit (nicht kondensierend):
5 ~ 95%

Abmessungen

Gewicht:
100g

Diagramm

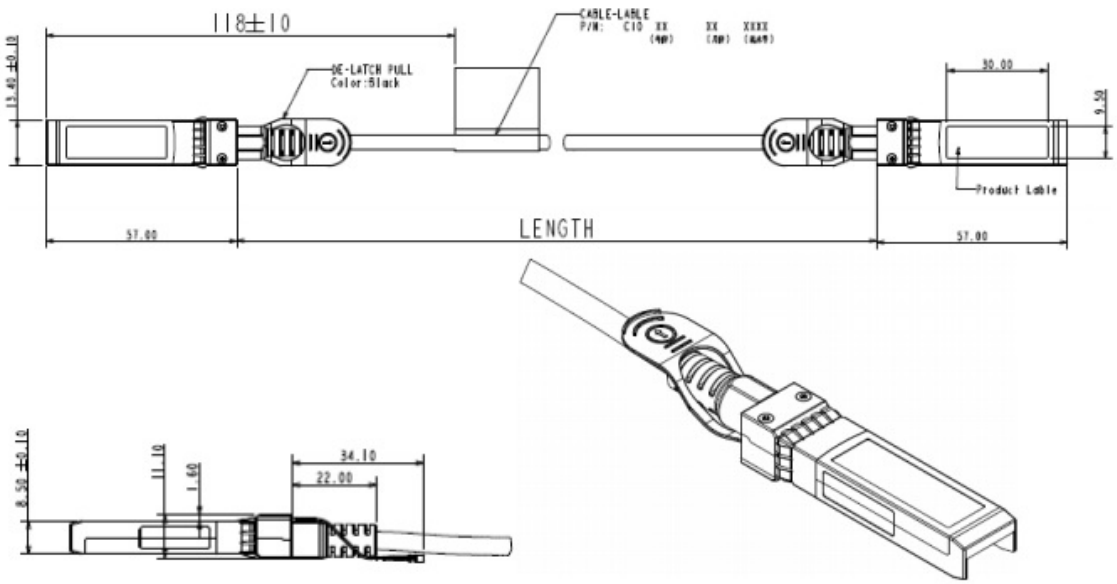

Order Information

DAC-0101

Package Contents

DAC-0101

No liability or responsibility for any errors or omissions in the content.
Specifications are subject to change without notice.
All mentioned brand names are registered trademarks and property of their owners.
Copyright © Digital Data Communications GmbH, Germany. All Rights Reserved.